Revisions				
Sl.	Rev.	Description	Date	Approved
1	00	Initial document	07.07.22	A.S.R

SPECIFICATIONS

MODEL No.: A3CK650150

(65.0VDC @ 15.0A, 975W CC-CV CHARGER FOR 48V LEAD ACID BATTERY)

MODEL No. : A3CK650150 (65.00VDC / 15.0A, 975W CC-CV CHARGER)

1.0 SPECIFICATIONS

1.1. GENERAL :

1.1.1.	SCOPE	:	This specification defines the performance characteristics of Switching power Supply.

1.2. INPUT CHARACTERISTICS :

1.2.1.	RATED INPUT VOLTAGE	:	230VAC.
1.2.2.	OPERATING INPUT RANGE	:	Minimum:180VAC, Nominal: 230VAC & Maximum: 280VAC.
1.2.3.	INPUT FREQUENCY	:	50Hz to 60Hz
1.2.4.	INPUT CURRENT	:	< 6500mA rms @ 200VAC
1.2.5.	EFFICIENCY	:	> 90% at all load conditions with complete AC input Operating Voltage (200VAC - 280VAC).
1.2.6.	INRUSH CURRENT	:	< 60A Peak @ 230VAC Cold start at 25 Deg.
1.2.7.	NO LOAD POWER	:	< 5.0W at 230VAC input.

1.3. OUTPUT CHARACTERISTICS :

1.3.1.	OUTPUT VOLTAGE STAGE-1	:	60.0VDC / 15.0A.
1.3.2.	OUTPUT VOLTAGE STAGE-2	:	65.0VDC / 11.0 When the battery voltage > 59.0V.
1.3.3.	OUTPUT VOLTAGE STAGE-3	:	65.0VDC / 6.0A When the Battery Voltage reaches to 64V.
1.3.4.	RIPPLE	:	< 900mV
1.3.5.	NOISE	:	< 1800mV (measured with 0.1µF ceramic disc & 10µF EL Capacitor across the output terminals).
1.3.6.	OUTPUT OVER CURRENT	:	15.0A.
1.3.7.	OUTPUT POWER LIMIT	:	975W Max.
1.3.8.	OUTPUT OVERSHOOT	:	< 10% of output voltage at all the conditions of input voltage.

1.4. PROTECTIONS :

1.4.1.	OUTPUT OVER LOAD / SHORT CIRCUIT	:	The power supply is protected against over load & short circuit. During over load & short ckt., unit goes to latch mode and recover only when reset the AC Power after removal of Short.
1.4.2.	INPUT OVER VOLTAGE PROTECTION	:	Available, If the input voltage between 300 - 330VAC unit will trip and recovers normally when te voltage reduces < 300VAC.
1.4.3.	OVER TEMPERATURE PROTECTION	:	The Power Supply is protected against the over laod, during the over load the if MOSFET temperature exceeds **90 deg**, Output current reduced to 2.0A CC and automatically increase the charging current to15A when the temperature reduces < 60 Deg.

1.4.4. OVER CHARGE PROTECTION : Once the battery full (Battery Voltage reaches to 63.50V), Charger will goes to Latch Mode, there by battery will be protected from Over charge. During this time the charger primary section will be in OFF, there by the primary MOSFET will be protected from high voltage during ideal condition, to re-on the charger need to reset the AC Power.

1.4.5. BATTERY FAULT PROTECTION: If the Battery not charging continuously for > 14 Hours ((The charging current > 500mA), the charger will goes to latch mode.

1.4.6. BATTERY REVERSE POLARITY : During the reverse polarity no current will through the charger. And unit goes to latch mode, need to reset the AC voltage after connecting right polarity.

1.5.0. ENVIRONMENT

1.5.1. TEMPERATURE : Operation: 0ºC to +50ºC
Storage: -15ºC to +70ºC ambient.

1.5.2. HUMIDITY : Operation: 10% RH to 90% RH non-condensing.
Storage: 5% RH to 95% RH non-condensing.

1.5.3. VIBRATION TEST : The unit shall withstand vibration test (on power OFF condition) at frequency of 10 to 300Hz and acceleration 1g for 45min on each axis X,Y and Z.

1.5.4. BUMP TEST : The unit shall with stand 1000 Bumps with acceleration 40g under packing condition.

1.5.5. DRY HEAT TEST : The unit shall with stand 55ºC for 16Hr. in power OFF condition.

1.5.6. COOLING : Forced Air cooling, The FAN will be ON when the charging current > 1.30A, there by the life of the FAN will be increased by switching off in ideal condition.

1.6.0. PRODUCT SAFETY AS PER IEC60950-1:

1.6.1. DI - ELECTRIC VOLTAGE WITHSTAND TEST (Hi-Pot) : 2.0KVrms, 50Hz for 60 Sec. (trip current set at 5mA). Between Shorted INPUT and Shorted OUTPUT Terminals. As per IEC 60950, 5.2.2 Test Procedure. And 5 Sec for Production.

1.6.2. INSULATION RESISTANCE : When tested with a 500VDC Megger, I.R should be >100M Ohms Between Shorted INPUT and Shorted OUTPUT Terminals.

1.7.0 EMI / EMC STANDARDS:

CE CISPER22	Conducted Emissions CISPR 22 / EN55022 Class A.
RE CISPR22	Radiated Emission CISPR 22 / EN55022 Class A.
IEC 61000-3-3	Voltage Fluctuation & Flicker
IEC 61000-4-4	Electrical fast transient / burst (EFT): 4KV.
IEC 61000-4-5	Surge Immunity test, AC power line: L-L: 4KV, L-E: 4KV.

1.8.0 RELIABILITY & QUALITY :

1.8.1 COMPONENT DERATING FACTORS : All semiconductors junction temperature shall not exceed the manufacturer's maximum thermal rating.

1.8.2 BURN-IN : The power supply shall be performed up to 48 Hours burn in at 40ºC at full load on output and nominal input voltage of 230VAC. No obnormal functioning shall occure in sample stage. 100% Burn-in test for Mass production for 2Hr's at 50 Deg Amb.

1.8.3 MTBF : > 50,000 hours at full load and 25ºC ambient conditions.

1.9.0 TERMINATIONS :

1.9.1. AC INPUT : AC input through 3-Pin 3Core AC power chord, directly soldered on the PCB.

1.9.2. DC OUTPUT : Through a 1.5M, 2.0Sq.mm Round cable with SB50 Connector.

1.10. ENCLOSURE :

1.10.1. MATERIAL : Aluminium Channel.

1.10.2. DIMENSIONS : L = 229.0 mm. W = 123.0 mm. H = 72.0 mm.

1.10.3. ENCLOSURE MATERIAL : Aluminium.

1.10.4. WEIGHT : Aprox. 1250 grms under packed condition.

MODEL No. : A3CK650150 (65.00VDC / 15.0A, 975W CC-CV CHARGER)

1.11.0. MECHANICAL DIMENSIONS & CONNECTION DRAWING:

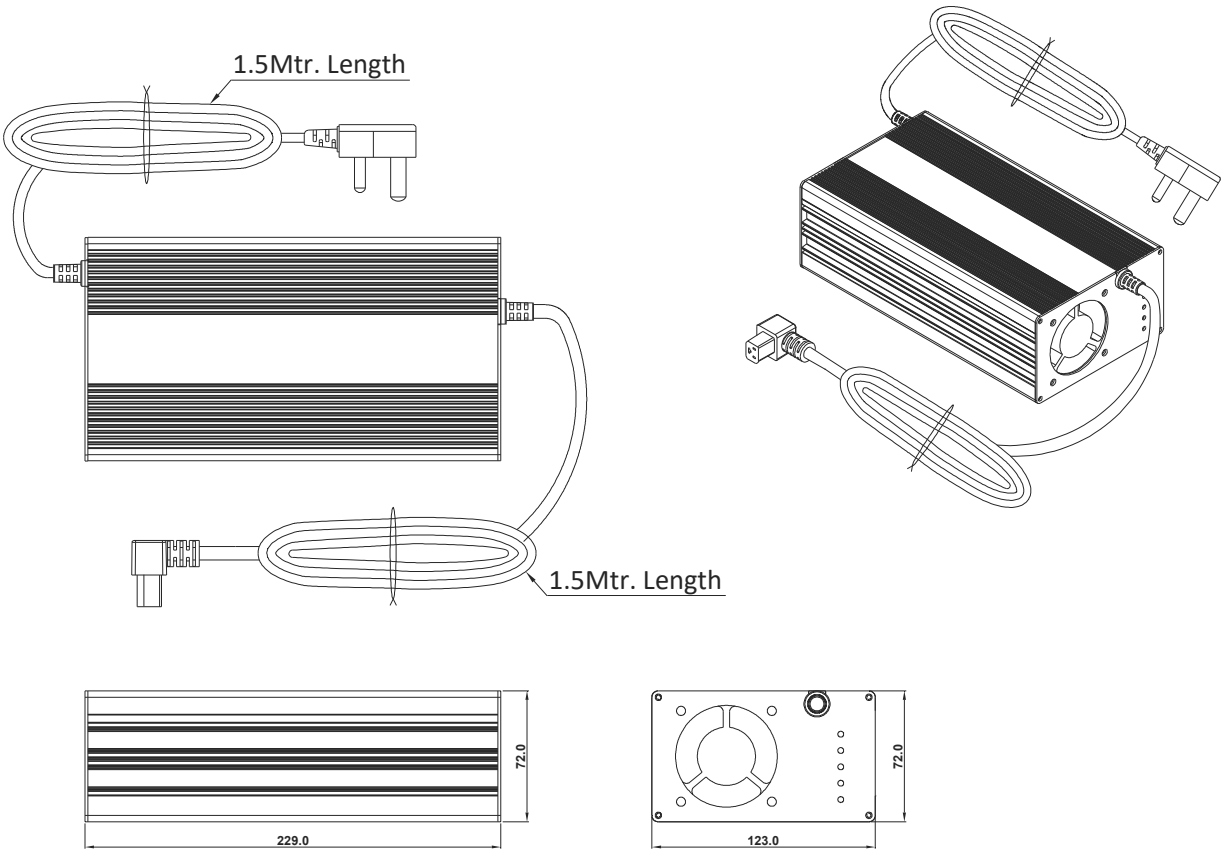

Note: DC Plug will be anderson connector, as per customer requirement it can be changed.

1.12.0. MARKING INFORMATION:

opeaque polyster sticker pasted on the bottom of the side of the enclosure,

1.13.0. BATTERY LEVEL INDICATIONS:

Sl.No.	Battery Voltage	LED
1	< 52.0V	25% LED Will Flash and continuous when voltage reaches to 52.0V.
2	< 55.0V	50% LED Will Flash and continuous when voltage reaches to 55.0V.
3	< 59.0V	75% LED Will Flash and continuous when voltage reaches to 59.0V.
4	< 64.0V	100% LED Will Flash and continuous when voltage reaches to 64.0V.

GREEN LED : ON Continuous for Power ON, Flashing in Fault Mode.

MODEL No. : A3CK650150 (65.00VDC / 15.0A, 975W CC-CV CHARGER)

1.14.0. CHARGING PROFILE:

Battery	:	48V Lead Acid Battery.
Capacity	:	100AH.
Charging Voltage set in charger	:	65.0V
Initial Battery Voltage	:	45.60V.
25% LED Constant	:	51.50V after 51 Min.
50% LED Constant	:	54.90V after 2Hr 4Min.
75% LED Constant	:	58.30V after 1Hr
100% LED Constant	:	63.40V after 1Hr 58Min.
Total Charging time	:	6 Hr's 50 Min.
Once the battery full	:	All LED's ON for 15 Min and then charger goes to Latch Mode